

Chains

Product Catalogue

FREDRIKSONS

Bringing Good Things Ahead



Contents

Welcome	3
Developement of Plastic Chains	4
FT70	5
RT114	6
RTF70	7
RTF114	8
FT54	9
KLDH50	10

Welcome to the World of Conveyor Solutions

Fredriksons, established in 1917, is a modern engineering industry in Vadstena, Sweden, by the beautiful lake Vättern. Our three business areas consist of Engineering, Contract Manufacturing and Conveyor Solutions.

At Engineering our constructors develop from idea to a complete product including documentation.

Our Contract Manufacturing attend small to middle-sized series for the food, medical technical and engineering industry.

Conveyor Solutions offer complete solutions, from development to production, installation and service. Our products portfolio provide package conveyors, vertical conveyors, accumulators, elevators etc.

This catalogue contains our chains. Separate product overviews in the catalogue present basic information about the different products.

Please visit our website or contact us for more information regarding our products.

www.conveyorsolutions.se

Fredriksons Verkstads AB
Box 148
S-592 23 Vadstena
Sweden
Phone: +46(0)143 296 00

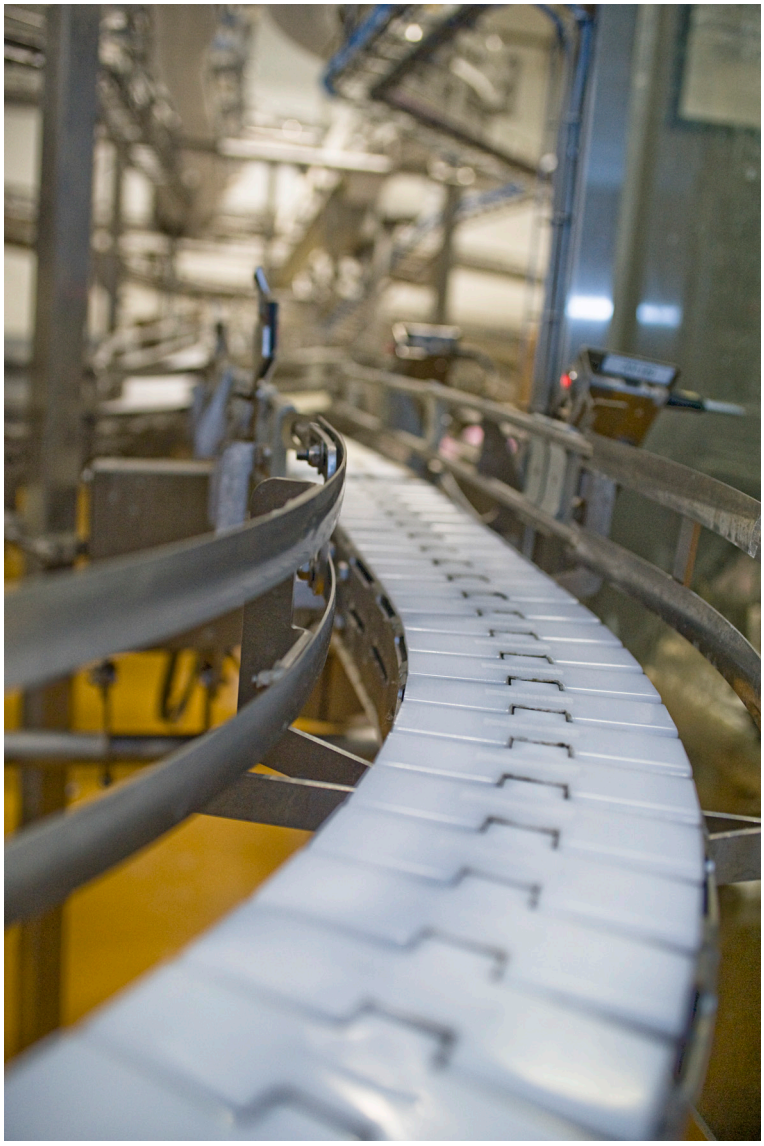

Development of Plastic Chains

For more than 40 years, Fredriksons has developed plastic chains for the food and beverage industry.

The original cardan link chain, invented in our engineering department, has been developed during the years. We are now proud to offer a range of chains in accordance with the most demanding standards, like BS EN 619.

We always try to improve our chains to reduce friction between conveyor body and chain, to Increase resistance to rough and sour environments and to wear. Thus, we aim to offer chains with the longest life to reduce cost and spare our environment.

The plastic chains together with our conveyor systems; primary packaging and secondary packaging, offer complete logistic solutions. Whether you use our chains in our conveyor solutions or in your own products we can always assist you with our knowledge.

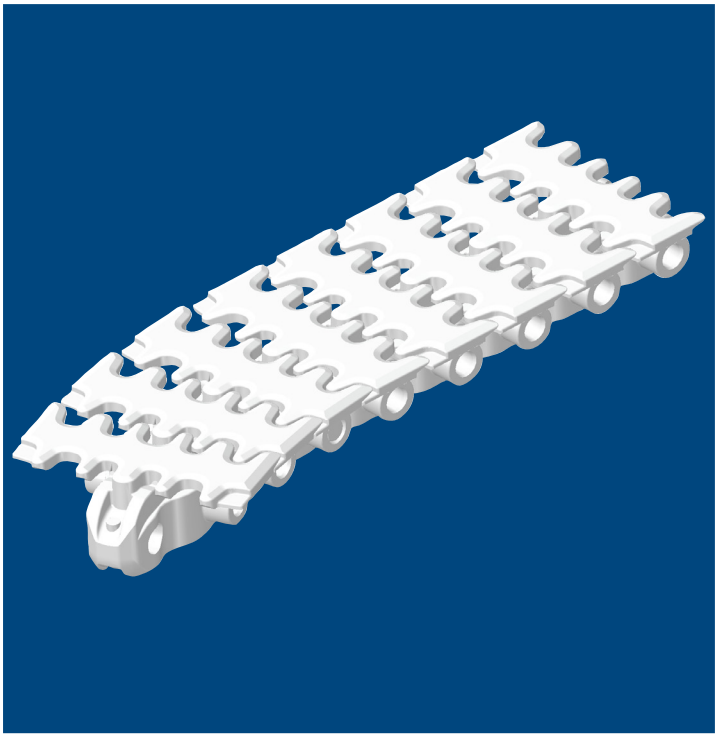

FT70

A plastic chain developed according to safety regulations BS EN619 standard. The chain can be ordered with rubber pins or friction lining. Recommended surrounding temperature is -18 - +50 °C. Recommended maximum work load at 20° is 100 kp/1000N.

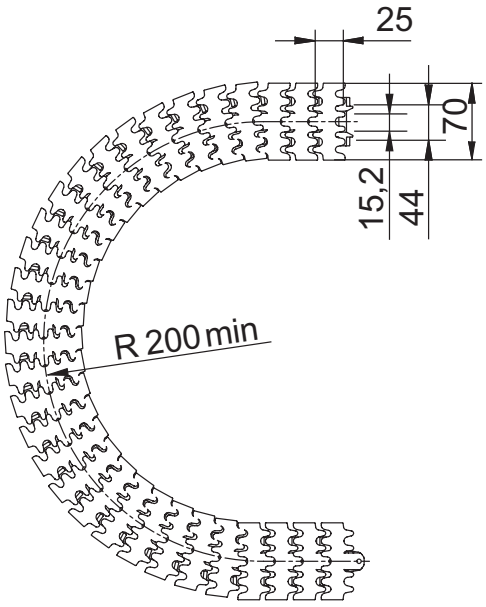

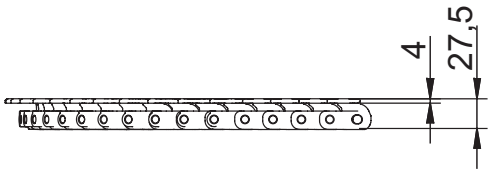

(mm)

Partnumber	Material	Length (L)	Weight	Width	Volume	Colour
3019400-0101	POM Link: Low friction ACETAL Moisture pickup 0.2% Rivet: Stainless steel	10 m per box	16 kg /10 m	70 mm	25.3 dm^3/10 m	White
3113504-0101	PBT Link: Low friction acid resis-tans Rivet: Stainless steel	10 m per box	16 kg /10 m	70 mm	25.3 dm^3/10 m	Grey

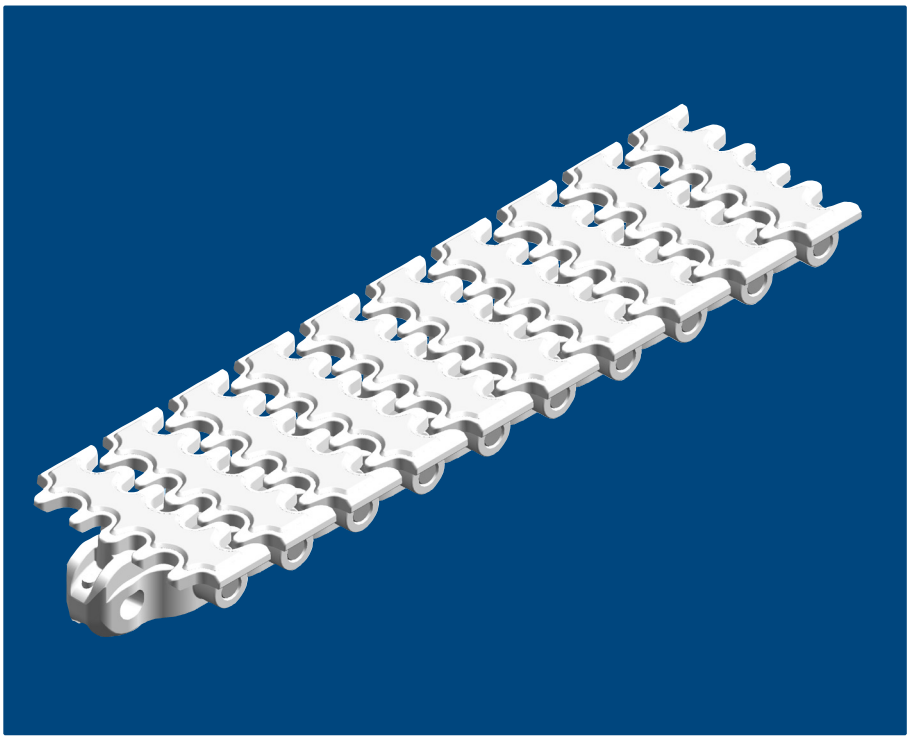

FTF70

A plastic chain with a friction surface. Recommended surrounding temperature is -18 - +50 °C. Recommended maximum work load at 20° is 100 kp/1000N.

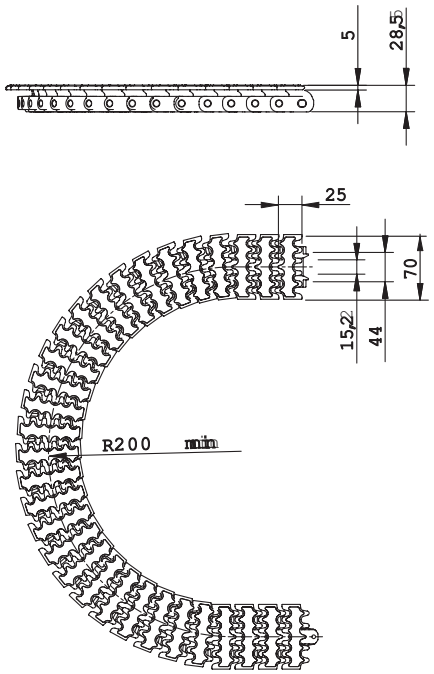

(mm)

Part number	Material	Length (L)	Weight	Width	Volume
F206604-101	POM Link: Low friction ACETAL Moisture pickup 0.2% Rivet: Stainless steel Friction surface: TPE	10 m per box	16 kg /10 m	70 mm	25.3 dm^3/10 m

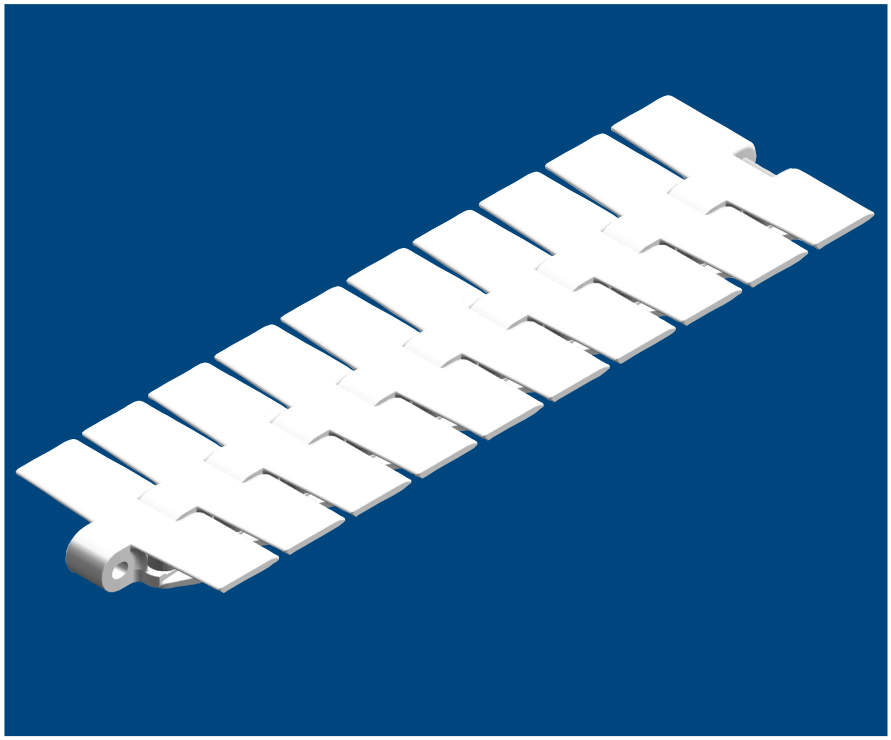

RT114

A plastic chain developed according to safety regulations BS EN619 standard. Recommended surrounding temperature is -18 - +50 °C. Recommended maximum work load at 20° is 200 kp/2000N.

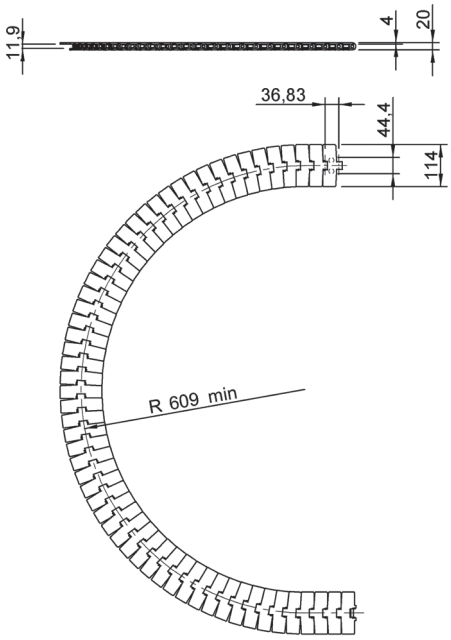

(mm)

Part number	Material	Length (L)	Weight	Width	Volume
3264755-0101	POM Link: Low friction ACETAL POLYAMID Moisture pickup 0.2% Rivet: Stainless steel	3 m per box	5 kg /3 m	114 mm	9.25 dm^3/3 m

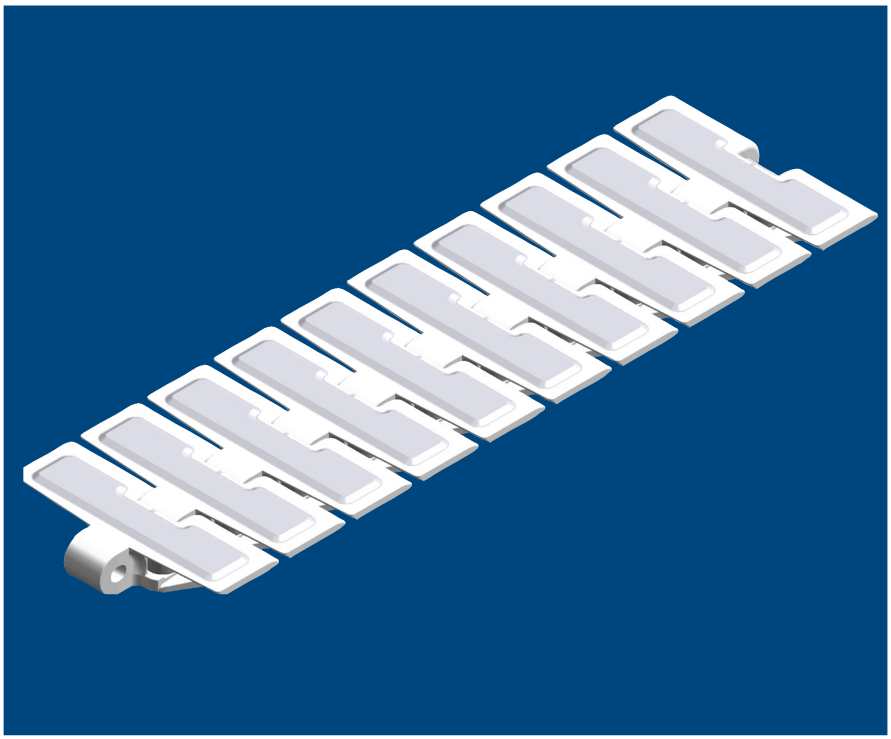

RTF114

A plastic chain with a friction surface. Recommended surrounding temperature is -18 - +50 °C. Recommended maximum work load at 20° is 200 kp/2000N.

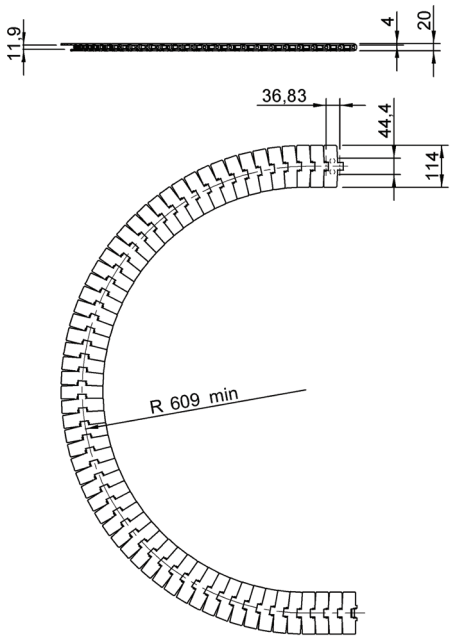

(mm)

Part number	Material	Length (L)	Weight	Width	Volume
F205728-101	POM Link: Low friction ACETAL POLYAMID Moisture pickup 0.2% Rivet: Stainless steel Friction surface: TPE	3 m per box	5 kg /3 m	114 mm	9.25 dm^3/3 m

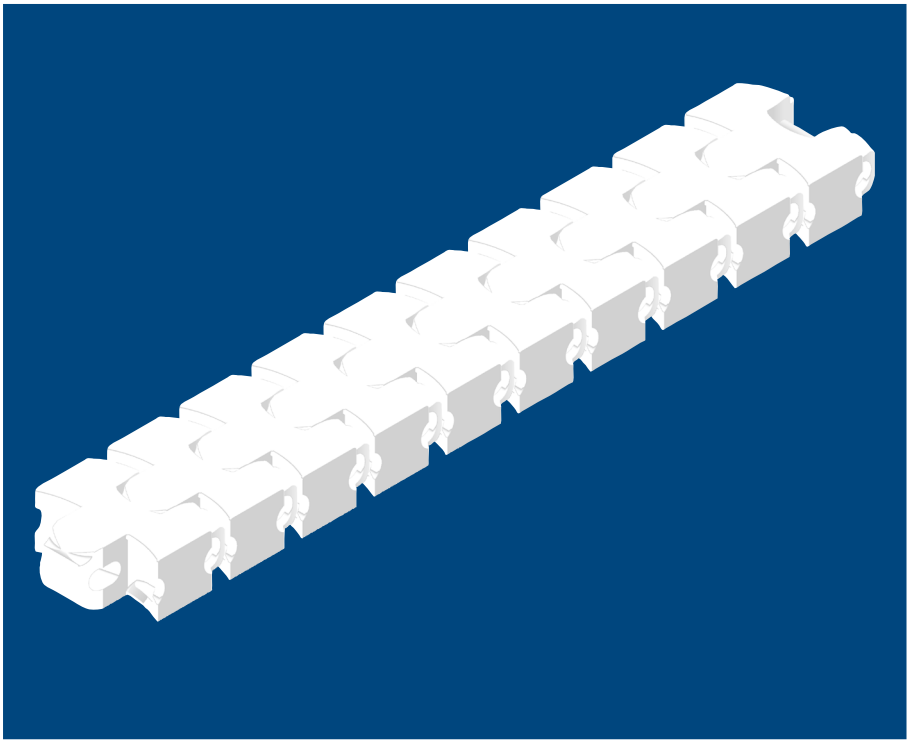

FT54

A plastic chain. Recommended surrounding temperature is -18 - +50 °C. Recommended maximum work load at 20° is 200 kp/2000N.

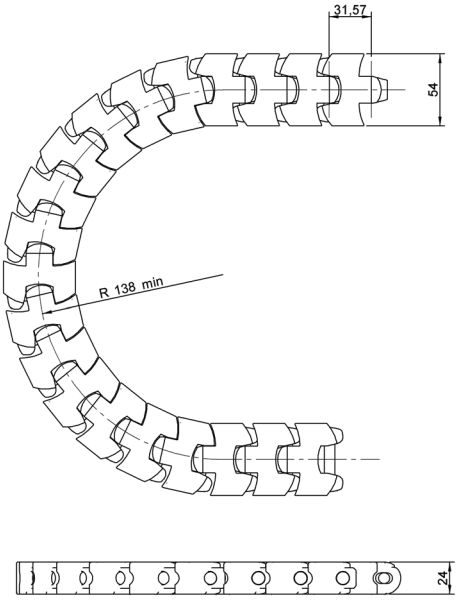

(mm)

Part number	Material	Length (L)	Weight	Width	Volume
1550500-0101	POM Link: Low friction ACETAL Moisture pickup 0.2% Rivet: Stainless steel	10 m per box	18 kg /10 m	54 mm	17.5 dm^3/10 m

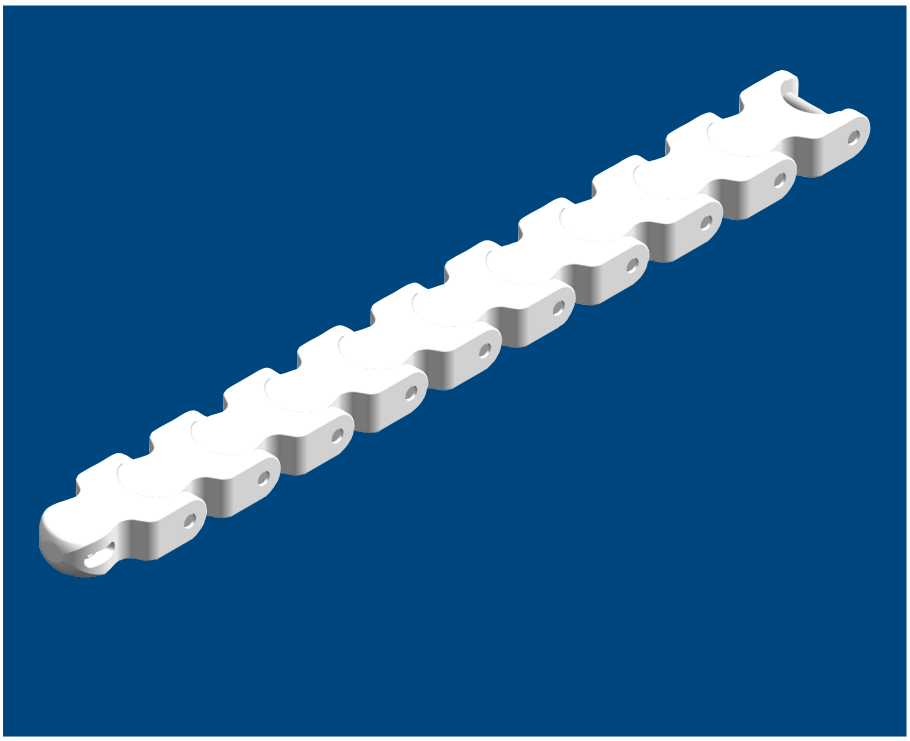

KLDH50

A plastic chain. Recommended surrounding temperature is -18 - +50 °C. Recommended maximum work load at 20° is 200 kp/2000N.

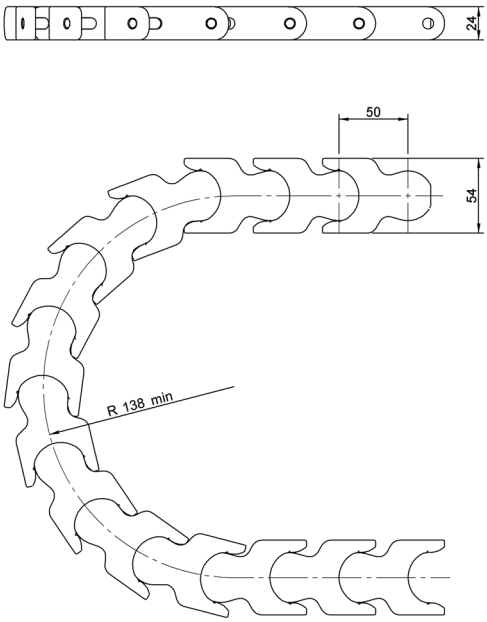

(mm)

Part number	Material	Length (L)	Weight	Width	Volume
12007	POM Link: Low friction ACETAL Moisture pickup 0.2% Rivet: Stainless steel Plunge: POLYAMID	10 m per box	15 kg /10 m	54 mm	17.54 dm^3/10 m

Read more about our solutions for primary and secondary packaging in our product catalogues.



FREDRIKSONS
Bringing Good Things Ahead

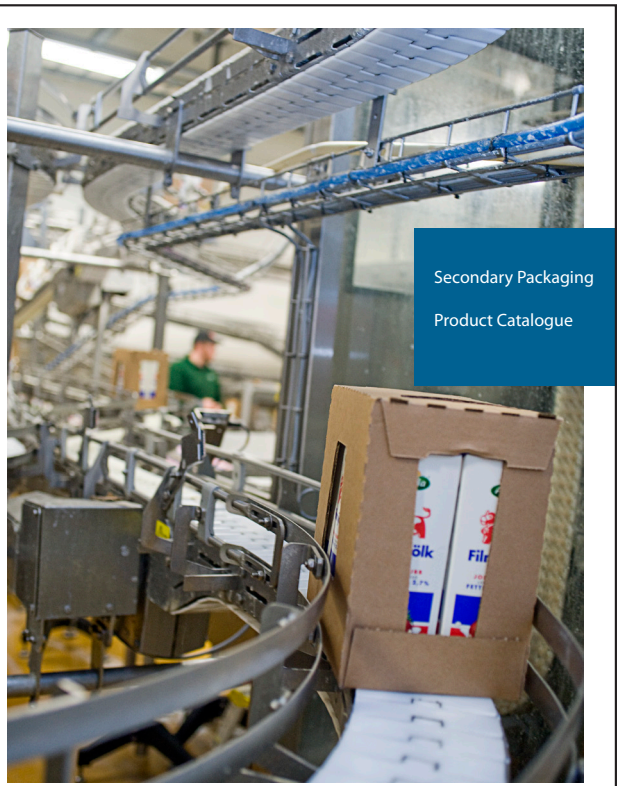

FREDRIKSONS
Bringing Good Things Ahead



Fredriksons Verkstads AB • P.O Box 148 • SE-592 23 Vadstena
Phone: +46 143 296 00 • Fax: +46 143 296 09
info@fredriksons.se • www.conveyorsolutions.se